Doc. Number :

■ Tentative Specification
☐ Preliminary Specification
☐ Approval Specification

MODEL NO.: M236H3
SUFFIX: LA3

Customer:

APPROVED BY **SIGNATURE**

Name / Title _____ _____

Note

Please return 1 copy for your confirmation with your signature and comments.

Approved By	Checked By	Prepared By
吳 2010.07.02 柏 勳	梁永祥	黃世中

The copyright belongs to CHIMEI InnoLux. Any unauthorized use is prohibited.

CONTENTS

1. GENERAL DESCRIPTION 5
1.1 OVERVIEW 5
1.2 GENERAL SPECIFICATI0NS 5
2. MECHANICAL SPECIFICATIONS 5
3. ABSOLUTE MAXIMUM RATINGS 5
3.1 ABSOLUTE RATINGS OF ENVIRONMENT 5
3.2 ELECTRICAL ABSOLUTE RATINGS 6
3.2.1 TFT LCD MODULE 6
3.2.2 BACKLIGHT UNIT 6
4. ELECTRICAL SPECIFICATIONS 7
4.1 FUNCTION BLOCK DIAGRAM 7
4.2. INTERFACE CONNECTIONS 7
4.3 ELECTRICAL CHARACTERISTICS 9
4.3.1 LCD ELETRONICS SPECIFICATION 9
4.3.2 Vcc Power Dip Condition 11
4.3.3 BACKLIGHT UNIT (LED matrix is 12S8P) 11
4.3.4 LIGHTBAR Connector Pin Assignment 12
4.4 LVDS INPUT SIGNAL SPECIFICATIONS 12
4.4.1 LVDS DATA MAPPING TABLE 12
4.4.2 COLOR DATA INPUT ASSIGNMENT 13
4.5 DISPLAY TIMING SPECIFICATIONS 14
4.6 POWER ON/OFF SEQUENCE 16
5. OPTICAL CHARACTERISTICS 17
5.1 TEST CONDITIONS 17
5.2 OPTICAL SPECIFICATIONS 17
6. RELIABILITY TEST ITEM 20
7. PACKING 21
7.1 PACKING SPECIFICATIONS 21
7.2 PACKING METHOD 21
7.3 PALLET 22
8. CMI MODULE LABEL 23
9. PRECAUTIONS 24
9.1 ASSEMBLY AND HANDLING PRECAUTIONS 24
9.2 STORAGE PRECAUTIONS 24
9.3 OPERATION PRECAUTIONS 24

The copyright belongs to CHIMEI InnoLux. Any unauthorized use is prohibited.

9.4 SAFETY PRECAUTIONS 25
9.5 SAFETY STANDARDS 25
9.6 OTHER 25
Appendix. OUTLINE DRAWING 25

The copyright belongs to CHIMEI InnoLux. Any unauthorized use is prohibited.

REVISION HISTORY

Version	Date	Page	Description
0.0	July, 02, 2010	All	Tentative Specification was first issued.

The copyright belongs to CHIMEI InnoLux. Any unauthorized use is prohibited.

1. GENERAL DESCRIPTION

1.1 OVERVIEW

M236H3-LA3 is a 23.6" TFT Liquid Crystal Display module with WLED Backlight unit and 30 pins 2ch-LVDS interface. This module supports 1920 x 1080 Full HD mode and can display up to 16.7M colors. The converter module for Backlight is not built in.

1.2 GENERAL SPECIFICATIONS

Item	Specification	Unit	Note
Screen Size	23.547" real diagonal		
Driver Element	a-si TFT active matrix	-	-
Pixel Number	1920 x R.G.B. x 1080	pixel	-
Pixel Pitch	0.2715 (H) x 0.2715 (V)	mm	-
Pixel Arrangement	RGB vertical stripe	-	-
Display Colors	16.7M	color	-
Transmissive Mode	Normally white	-	-
Surface Treatment	AG type, 3H hard coating, Haze 25	-	-
Luminance, White	300	Cd/m2	
Power Consumption	Total (16.7) W (Max.)@ cell (6.6) W (Max.), BL (10.1) W (Max.)		(1)

Note (1) The specified power consumption : Total= cell (reference 4.3.1)+BL (reference 4.3.3)

2. MECHANICAL SPECIFICATIONS

Item		Min.	Typ.	Max.	Unit	Note
Module Size	Horizontal (H)	544.3	544.8	545.3	mm	(1)
	Vertical (V)	320.0	320.5	321.0	mm	
	Thickness (T)	-	11.4	11.9	mm	
Bezel Area	Horizontal	525.07	525.22	525.37	mm	
	Vertical	297.07	297.22	297.37	mm	
Active Area	Horizontal	-	521.28	-	mm	
	Vertical	-	293.22	-	mm	
Weight		-	2750	2800	g	

Note (1) Please refer to the attached drawings for more information of front and back outline dimensions.

3. ABSOLUTE MAXIMUM RATINGS

3.1 ABSOLUTE RATINGS OF ENVIRONMENT

Item	Symbol	Value		Unit	Note
		Min.	Max.		
Storage Temperature	TST	-20	60	ºC	(1)
Operating Ambient Temperature	TOP	0	50	ºC	(1), (2)

Note (1)

(a) 90 %RH Max. (Ta <= 40 ºC).

(b) Wet-bulb temperature should be 39 ºC Max. (Ta > 40 ºC).

(c) No condensation.

The copyright belongs to CHIMEI InnoLux. Any unauthorized use is prohibited.

Note (2) The temperature of panel surface should be 0 ºC min. and 60 ºC max.

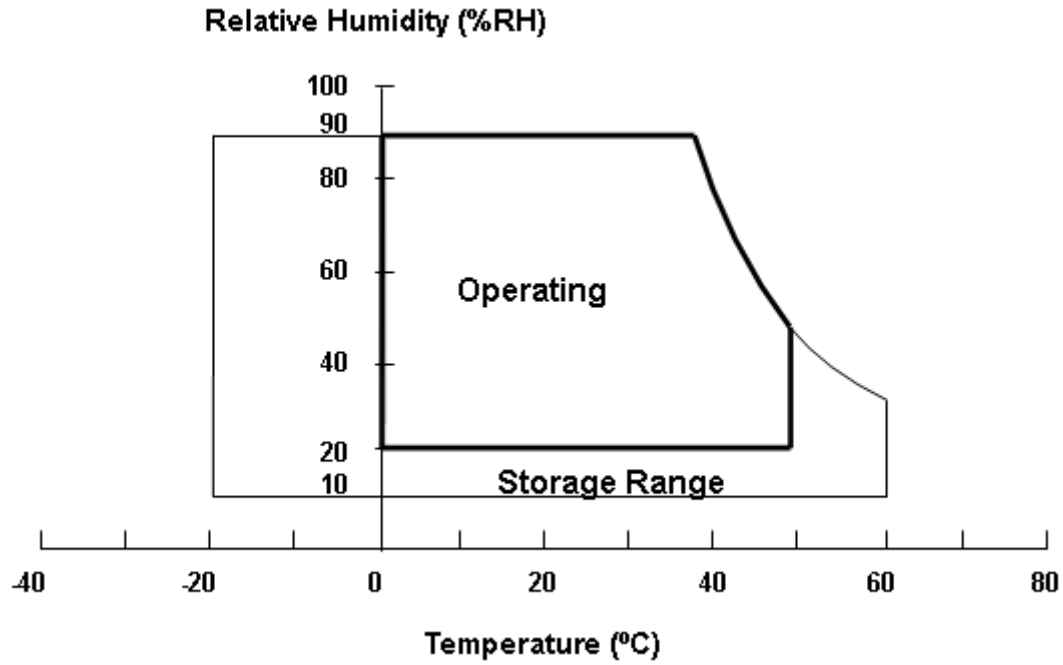

3.2 ELECTRICAL ABSOLUTE RATINGS

3.2.1 TFT LCD MODULE

Item	Symbol	Value		Unit	Note
		Min.	Max.		
Power Supply Voltage	VCCS	-0.3	6.0	V	(1)
Logic Input Voltage	V_{IN}	-0.3	3.6	V	

3.2.2 BACKLIGHT UNIT

Item	Symbol	Value			Unit	Note
		Min.	Typ	Max.		
LED Forward Current Per Input Pin	I_F	0	40	50	mA	(1), (2) Duty=100%
LED Reverse Voltage Per Input Pin	V_R	---	---	60	V	
LED Pulse Forward Current Per Input Pin	I_P	---	---	160	mA	(1), (2) Pulse Width≦10msec. and Duty≦10%

Note (1) Permanent damage to the device may occur if maximum values are exceeded. Function operation should be restricted to the conditions described under Normal Operating Conditions.

Note (2) Specified values are for input pin of LED light bar at Ta=25±2 ℃ (Refer to 4.3.3 and 4.3.4 for further information).

The copyright belongs to CHIMEI InnoLux. Any unauthorized use is prohibited.

4. ELECTRICAL SPECIFICATIONS

4.1 FUNCTION BLOCK DIAGRAM

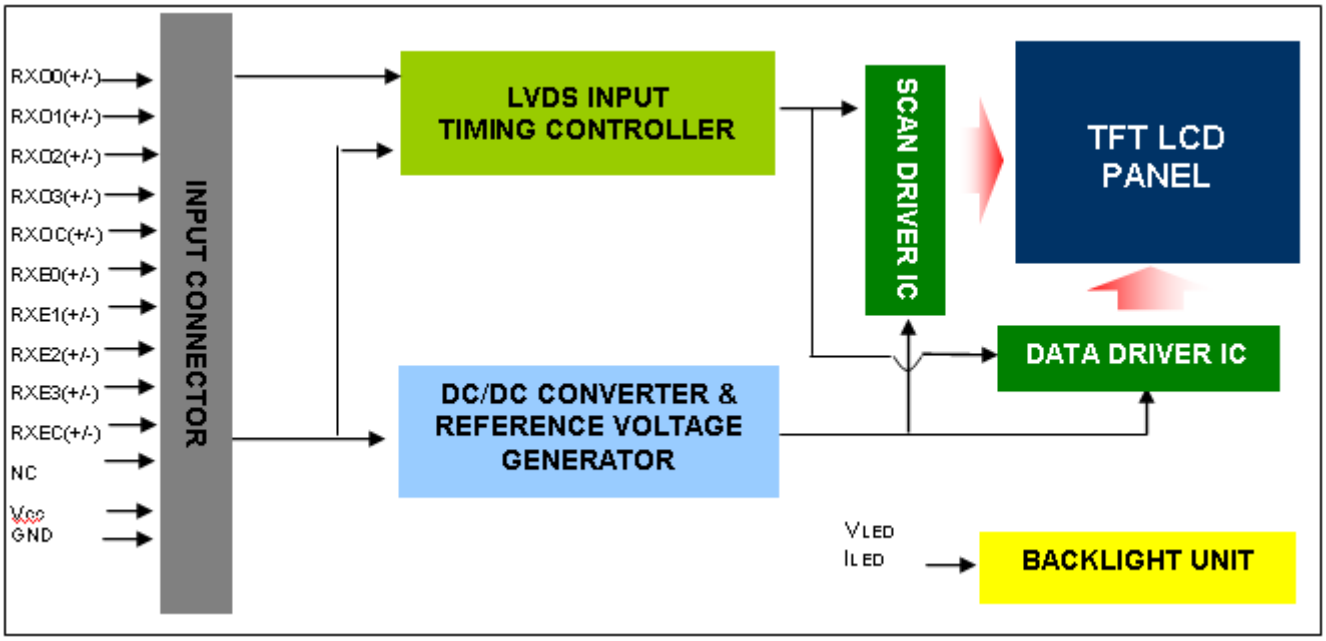

4.2. INTERFACE CONNECTIONS

PIN ASSIGNMENT

Pin	Name	Description
1	RXO0-	Negative LVDS differential data input. Channel O0 (odd)
2	RXO0+	Positive LVDS differential data input. Channel O0 (odd)
3	RXO1-	Negative LVDS differential data input. Channel O1 (odd)
4	RXO1+	Positive LVDS differential data input. Channel O1 (odd)
5	RXO2-	Negative LVDS differential data input. Channel O2 (odd)
6	RXO2+	Positive LVDS differential data input. Channel O2 (odd)
7	GND	Ground
8	RXOC-	Negative LVDS differential clock input. (odd)
9	RXOC+	Positive LVDS differential clock input. (odd)
10	RXO3-	Negative LVDS differential data input. Channel O3(odd)
11	RXO3+	Positive LVDS differential data input. Channel O3 (odd)
12	RXE0-	Negative LVDS differential data input. Channel E0 (even)
13	RXE0+	Positive LVDS differential data input. Channel E0 (even)
14	GND	Ground
15	RXE1-	Negative LVDS differential data input. Channel E1 (even)
16	RXE1+	Positive LVDS differential data input. Channel E1 (even)
17	GND	Ground
18	RXE2-	Negative LVDS differential data input. Channel E2 (even)
19	RXE2+	Positive LVDS differential data input. Channel E2 (even)
20	RXEC-	Negative LVDS differential clock input. (even)
21	RXEC+	Positive LVDS differential clock input. (even)
22	RXE3-	Negative LVDS differential data input. Channel E3 (even)
23	RXE3+	Positive LVDS differential data input. Channel E3 (even)
24	GND	Ground
25	NC	For LCD internal use only, Do not connect

The copyright belongs to CHIMEI InnoLux. Any unauthorized use is prohibited.

Pin	Name	Description
26	NC	For LCD internal use only, Do not connect
27	NC	For LCD internal use only, Do not connect
28	Vcc	+5.0V power supply
29	Vcc	+5.0V power supply
30	Vcc	+5.0V power supply

Note (1) Connector Part No.:

093G30-B0001A(STARCONN) or MSAKT2407P30HA(STM) or equivalent

Note (2) User's connector Part No:

Mating Wire Cable Connector Part No.: FI-X30H(JAE) or FI-X30HL(JAE)

Mating FFC Cable Connector Part No.: 217007-013001 (P-TWO) or JF05X030-1 (JAE).

Note (3) The first pixel is odd.

Note (4) Input signal of even and odd clock should be the same timing.

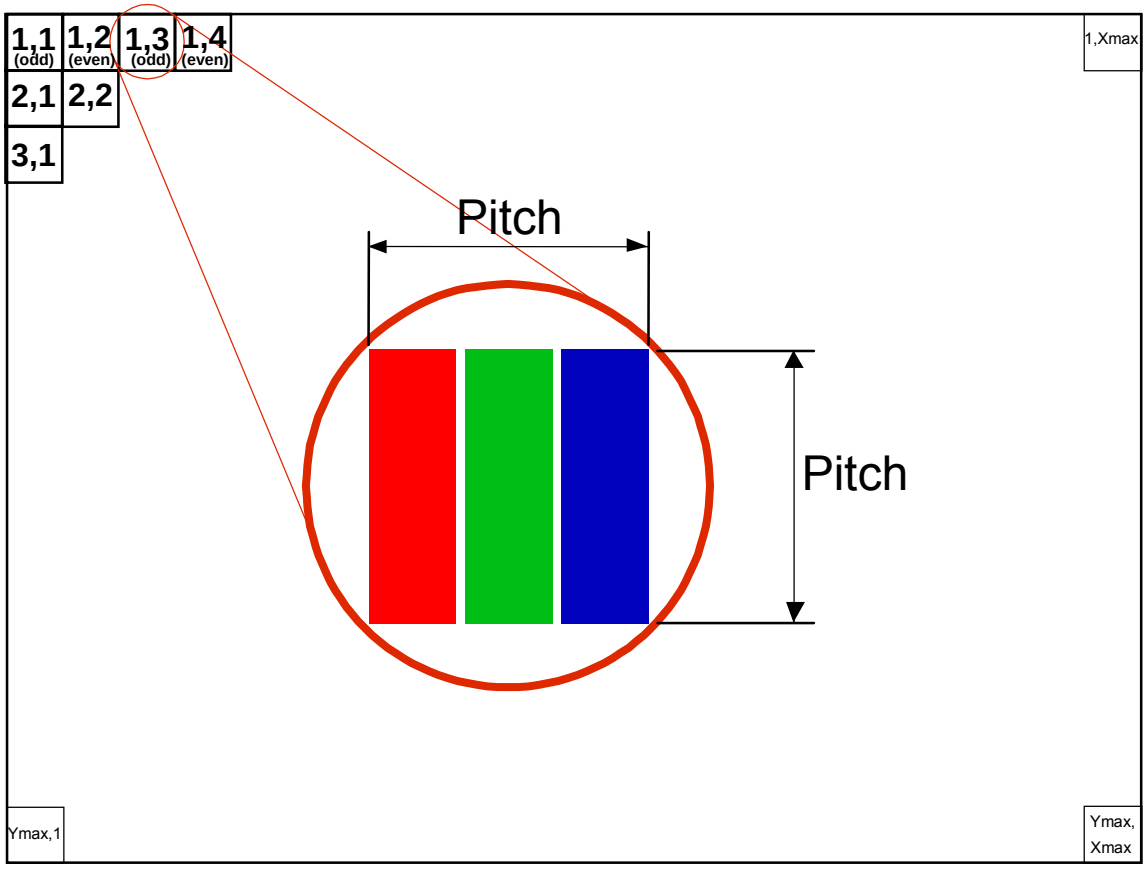

The copyright belongs to CHIMEI InnoLux. Any unauthorized use is prohibited.

4.3 ELECTRICAL CHARACTERISTICS

4.3.1 LCD ELETRONICS SPECIFICATION

Parameter		Symbol	Value			Unit	Note
			Min.	Typ.	Max.		
Power Supply Voltage		Vcc	4.5	5.0	5.5	V	-
Ripple Voltage		V_{RP}			300	mV	-
Rush Current		I_{RUSH}			3	A	(2)
Power Supply Current	White		TBD	(0.5)	TBD	A	(3)a
	Black		TBD	(1.1)	TBD	A	(3)b
	Vertical Stripe		TBD	(0.9)	TBD	A	(3)c
Power Consumption		PLCD	TBD	(5.5)	TBD	Watt	(4)
LVDS differential input voltage		Vid	200	-	600	mV	
LVDS common input voltage		Vic	1.0	1.2	1.4	V	
Logic High Input Voltage		VIH	2.64	-	3.6	V	
Logic Low Input Voltage		VIL	0	-	0.66	V	

Note (1) The ambient temperature is Ta = 25 ± 2 ºC.

Note (2) Measurement Conditions:

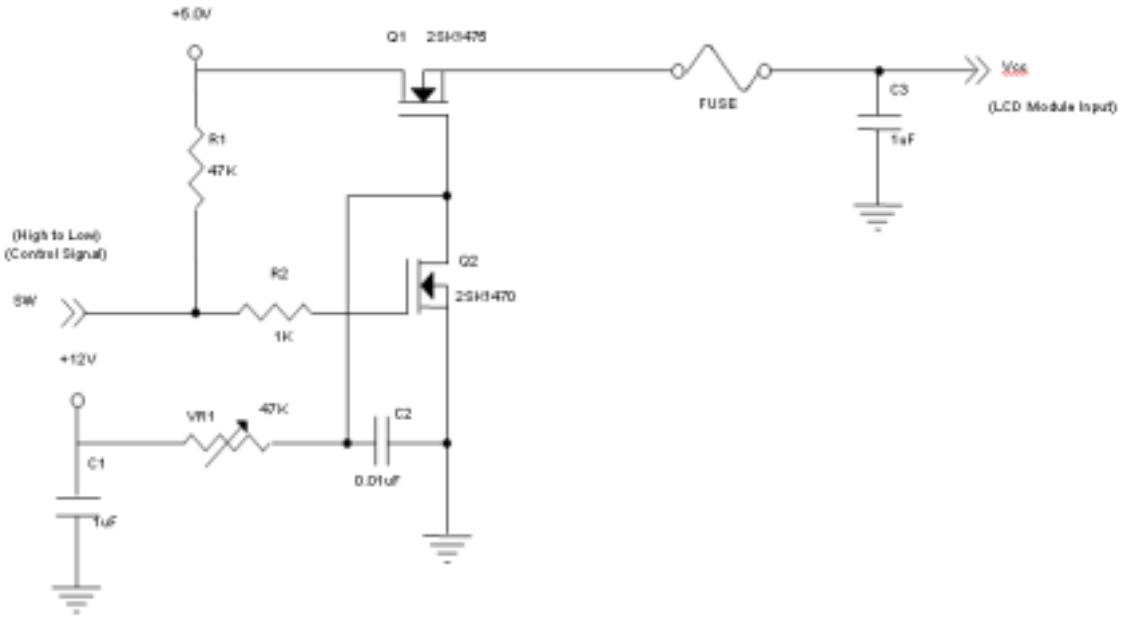

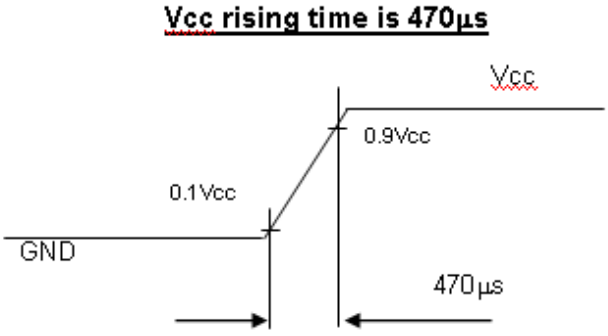

The copyright belongs to CHIMEI InnoLux. Any unauthorized use is prohibited.

Note (3) The specified power supply current is under the conditions at Vcc = 5.0 V, Ta = 25 ± 2 ºC, Fr = 60Hz, whereas a power dissipation check pattern below is displayed.

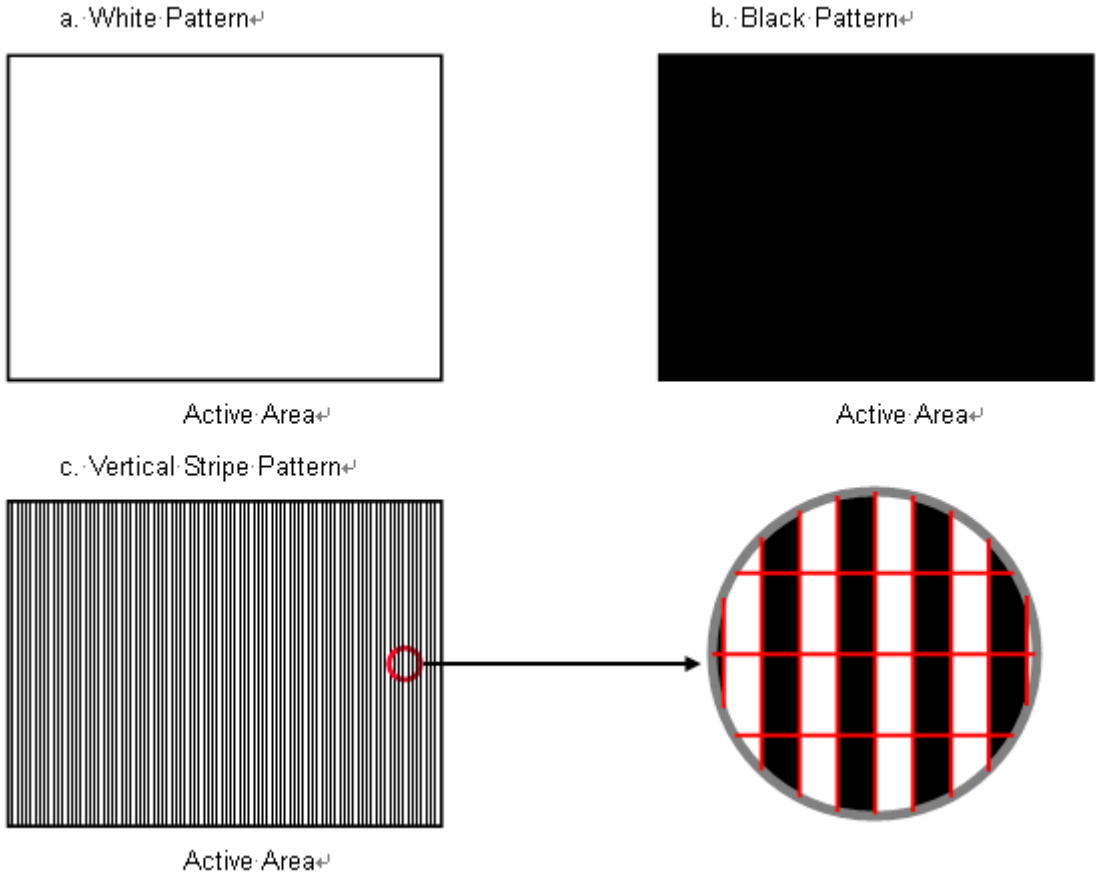

Note (4) The power consumption is specified at the pattern with the maximum current.

Note (5) VID waveform condition

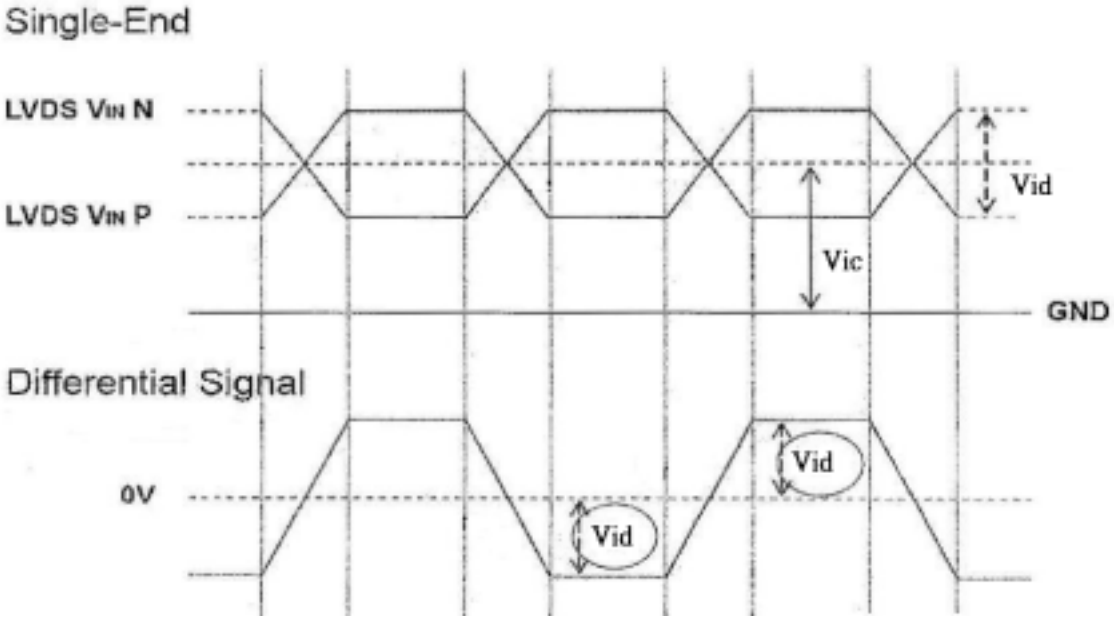

The copyright belongs to CHIMEI InnoLux. Any unauthorized use is prohibited.

4.3.2 Vcc Power Dip Condition

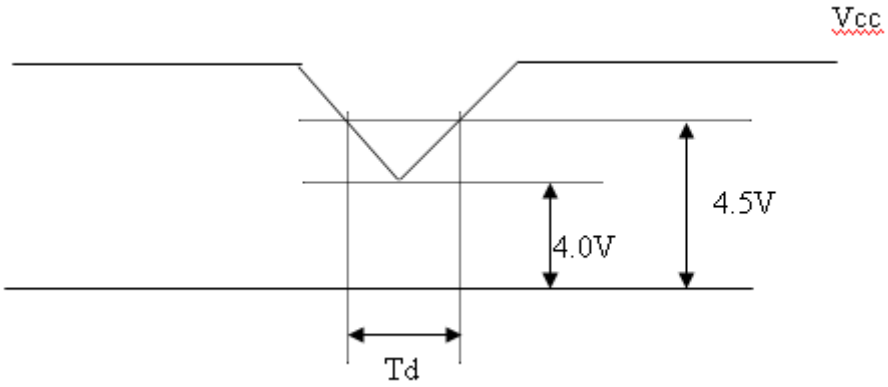

4.3.3 BACKLIGHT UNIT (LED matrix is 9S8P)

Parameter	Symbol	Value			Unit	Note
		Min.	Typ.	Max.		
LED Light Bar Input Voltage Per Input Pin	VPIN	26.1	28.8	31.5	V	(1), Duty=100%, IPIN=40mA
LED Light Bar Current Per Input Pin	IPIN	0	50	56	mA	(1), (2) Duty=100%
LED Life Time	LLED	30000			Hrs	(3)
Power Consumption	PBL	---	11.52	TBD	W	(1) Duty=100%, IPIN=40mA

Note (1) LED light bar input voltage and current are measured by utilizing a true RMS multimeter as shown below:

Note (2) PBL = IPIN × VPIN × (8) input pins , LED light bar circuit is (12)Series, (8)Parallel.

Note (3) The lifetime of LED is defined as the time when LED packages continue to operate under the conditions at Ta = 25 ±2 ℃ and I= (20)mA (per chip) until the brightness becomes ≦ 50% of its original value.

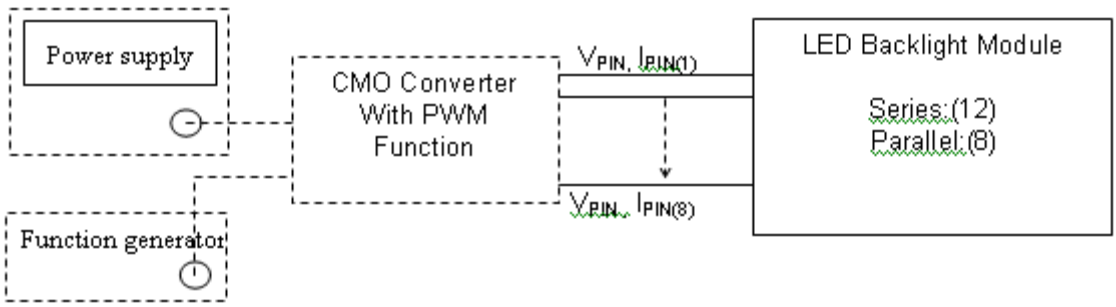

The copyright belongs to CHIMEI InnoLux. Any unauthorized use is prohibited.

4.3.4 LIGHTBAR Connector Pin Assignment

Connector: 7083K-F12N-00L , (Entery) or Compatible

CN1

Pin number	Description
1	Cathode of LED string
2	Cathode of LED string
3	Cathode of LED string
4	Cathode of LED string
5	Not connection, this pin should be open
6	VLED
7	VLED
8	Not connection, this pin should be open
9	Cathode of LED string
10	Cathode of LED string
11	Cathode of LED string
12	Cathode of LED string

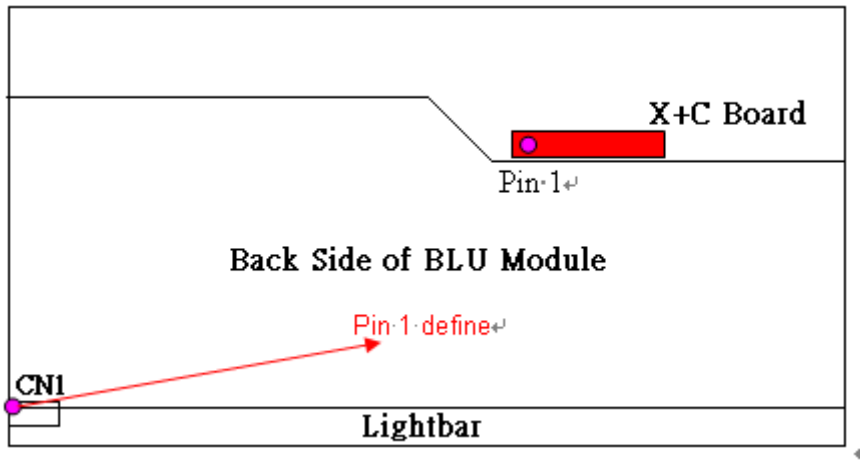

4.4 LVDS INPUT SIGNAL SPECIFICATIONS

4.4.1 LVDS DATA MAPPING TABLE

LVDS Channel O0	LVDS output	D7	D6	D4	D3	D2	D1	D0
	Data order	OG0	OR5	OR4	OR3	OR2	OR1	OR0
LVDS Channel O1	LVDS output	D18	D15	D14	D13	D12	D9	D8
	Data order	OB1	OB0	OG5	OG4	OG3	OG2	OG1
LVDS Channel O2	LVDS output	D26	D25	D24	D22	D21	D20	D19
	Data order	DE	NA	NA	OB5	OB4	OB3	OB2
LVDS Channel O3	LVDS output	D23	D17	D16	D11	D10	D5	D27
	Data order	NA	OB7	OB6	OG7	OG6	OR7	OR6
LVDS Channel E0	LVDS output	D7	D6	D4	D3	D2	D1	D0
	Data order	EG0	ER5	ER4	ER3	ER2	ER1	ER0
LVDS Channel E1	LVDS output	D18	D15	D14	D13	D12	D9	D8
	Data order	EB1	EB0	EG5	EG4	EG3	EG2	EG1
LVDS Channel E2	LVDS output	D26	D25	D24	D22	D21	D20	D19
	Data order	DE	NA	NA	EB5	EB4	EB3	EB2
LVDS Channel E3	LVDS output	D23	D17	D16	D11	D10	D5	D27
	Data order	NA	EB7	EB6	EG7	EG6	ER7	ER6

The copyright belongs to CHIMEI InnoLux. Any unauthorized use is prohibited.

4.4.2 COLOR DATA INPUT ASSIGNMENT

The brightness of each primary color (red, green and blue) is based on the 8-bit gray scale data input for the color. The higher the binary input, the brighter the color. The table below provides the assignment of color versus data input.

Color		Data Signal																							
		Red								Green								Blue							
		R7	R6	R5	R4	R3	R2	R1	R0	G7	G6	G5	G4	G3	G2	G1	G0	B7	B6	B5	B4	B3	B2	B1	B0
Basic Colors	Black	0	0	0	0	0	0	0	0	0	0	0	0	0	0	0	0	0	0	0	0	0	0	0	0
	Red	1	1	1	1	1	1	1	1	0	0	0	0	0	0	0	0	0	0	0	0	0	0	0	0
	Green	0	0	0	0	0	0	0	0	1	1	1	1	1	1	1	1	0	0	0	0	0	0	0	0
	Blue	0	0	0	0	0	0	0	0	0	0	0	0	0	0	0	0	1	1	1	1	1	1	1	1
	Cyan	0	0	0	0	0	0	0	0	1	1	1	1	1	1	1	1	1	1	1	1	1	1	1	1
	Magenta	1	1	1	1	1	1	1	1	0	0	0	0	0	0	0	0	1	1	1	1	1	1	1	1
	Yellow	1	1	1	1	1	1	1	1	1	1	1	1	1	1	1	1	0	0	0	0	0	0	0	0
	White	1	1	1	1	1	1	1	1	1	1	1	1	1	1	1	1	1	1	1	1	1	1	1	1
Gray Scale Of Red	Red(0) / Dark	0	0	0	0	0	0	0	0	0	0	0	0	0	0	0	0	0	0	0	0	0	0	0	0
	Red(1)	0	0	0	0	0	0	0	1	0	0	0	0	0	0	0	0	0	0	0	0	0	0	0	0
	Red(2)	0	0	0	0	0	0	1	0	0	0	0	0	0	0	0	0	0	0	0	0	0	0	0	0
	:	:	:	:	:	:	:	:	:	:	:	:	:	:	:	:	:	:	:	:	:	:	:	:	:
	:	:	:	:	:	:		:		:		:		:	:	:			:		:	:	:	:	
	Red(253)	1	1	1	1	1	1	0	1	0	0	0	:0	0	0	0	0	0	0	0	0	0	0	0	:0
	Red(254)	1	1	1	1	1	1	1	0	0	0	0	0	0	0	0	0	0	0	0	0	0	0	0	0
	Red(255)	1	1	1	1	1	1	1	1	0	0	0	0	0	0	0	0	0	0	0	0	0	0	0	0
Gray Scale Of Green	Green(0) / Dark	0	0	0	0	0	0	0	0	0	0	0	0	0	0	0	0	0	0	0	0	0	0	0	0
	Green(1)	0	0	0	0	0	0	0	0	0	0	0	0	0	0	0	1	0	0	0	0	0	0	0	0
	Green(2)	0	0	0	0	0	0	0	0	0	0	0	0	0	0	1	0	0	0	0	0	0	0	0	0
	:	:	:	:	:	:	:	:	:	:	:	:	:	:	:	:	:	:	:	:	:	:	:	:	:
	:	:	:	:	:	:	:	:	:	:	:	:	:	:	:	:	:	:	:	:	:	:	:	:	:
	Green(253)	0	0	0	0	0	0	0	0	1	1	1	1	1	1	0	1	0	0	0	0	0	0	0	0
	Green(254)	0	0	0	0	0	0	0	0	1	1	1	1	1	1	1	0	0	0	0	0	0	0	0	0
	Green(255)	0	0	0	0	0	0	0	0	1	1	1	1	1	1	1	1	0	0	0	0	0	0	0	0
Gray Scale Of Blue	Blue(0) / Dark	0	0	0	0	0	0	0	0	0	0	0	0	0	0	0	0	0	0	0	0	0	0	0	0
	Blue(1)	0	0	0	0	0	0	0	0	0	0	0	0	0	0	0	0	0	0	0	0	0	0	0	1
	Blue(2)	0	0	0	0	0	0	0	0	0	0	0	0	0	0	0	0	0	0	0	0	0	0	1	0
	:	:	:	:	:	:	:	:	:	:	:	:	:	:	:	:	:	:	:	:	:	:	:	:	:
	:	:	:	:	:	:	:	:	:	:	:	:	:	:	:	:	:	:	:	:	:	:	:	:	:
	Blue(253)	0	0	0	0	0	0	0	0	0	0	0	0	0	0	0	0	1	1	1	1	1	1	0	1
	Blue(254)	0	0	0	0	0	0	0	0	0	0	0	0	0	0	0	0	1	1	1	1	1	1	1	0
	Blue(255)	0	0	0	0	0	0	0	0	0	0	0	0	0	0	0	0	1	1	1	1	1	1	1	1

Note (1) 0: Low Level Voltage, 1: High Level Voltage

The copyright belongs to CHIMEI InnoLux. Any unauthorized use is prohibited.

4.5 DISPLAY TIMING SPECIFICATIONS

The input signal timing specifications are shown as the following table and timing diagram.

Signal	Item	Symbol	Min.	Typ.	Max.	Unit	Note
LVDS Clock	Frequency	Fc	58.54	74.25	98	MHz	-
	Period	Tc	-	13.47	-	ns	
	Input cycle to cycle jitter	T_{rcl}	-0.02*Tc	-	0.02*Tc	ns	(1)
	Input Clock to data skew	TLVCCS	TBD	TBD	TBD		(2)
	Spread spectrum modulation range	F_{clkin_mod}	0.98*Fc	-	1.02*Fc	MHz	(3)
	Spread spectrum modulation frequency	F_{SSM}	-	-	200	KHz	
Vertical Display Term	Frame Rate	Fr	50	60	75	Hz	Tv=Tvd+Tvb
	Total	Tv	TBD	1125	TBD	Th	-
	Active Display	Tvd	1080	1080	1080	Th	-
	Blank	Tvb	TBD	45	TBD	Th	-
Horizontal Display Term	Total	Th	TBD	2200	TBD	Tc	Th=Thd+Thb
	Active Display	Thd	1920	1920	1920	Tc	-
	Blank	Thb	TBD	280	TBD	Tc	-

Note: Because this module is operated by DE only mode, Hsync and Vsync input signals are ignored.

INPUT SIGNAL TIMING DIAGRAM

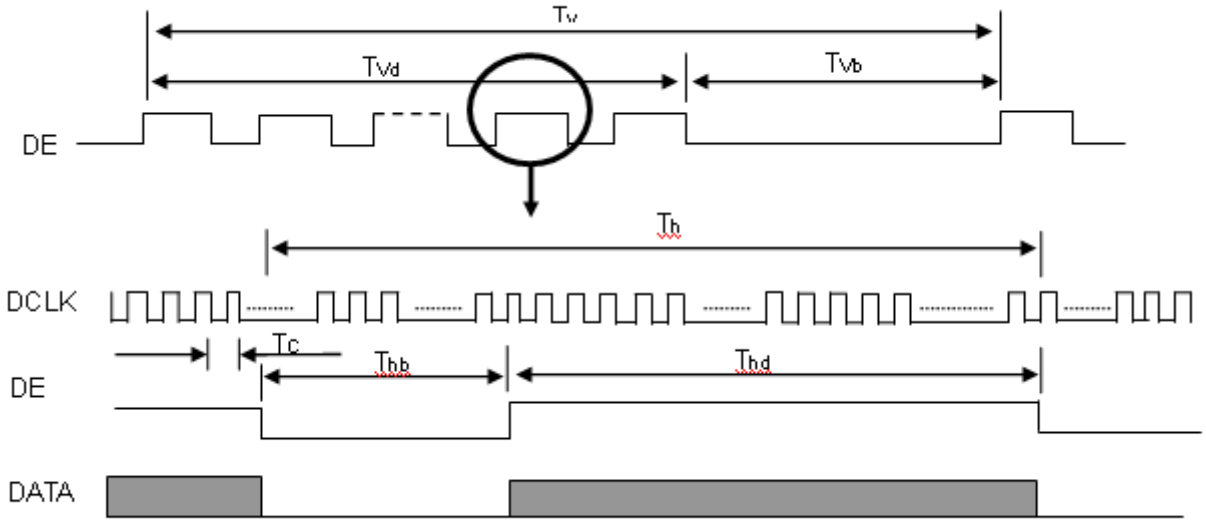

The copyright belongs to CHIMEI InnoLux. Any unauthorized use is prohibited.

Note (1) The input clock cycle-to-cycle jitter is defined as below figures. Trcl = I T_1 – TI

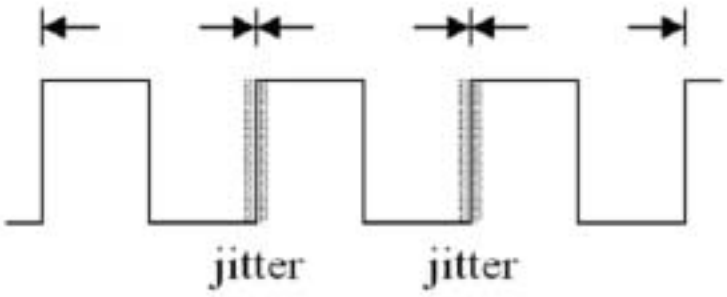

Note (2) Input Clock to data skew is defined as below figures.

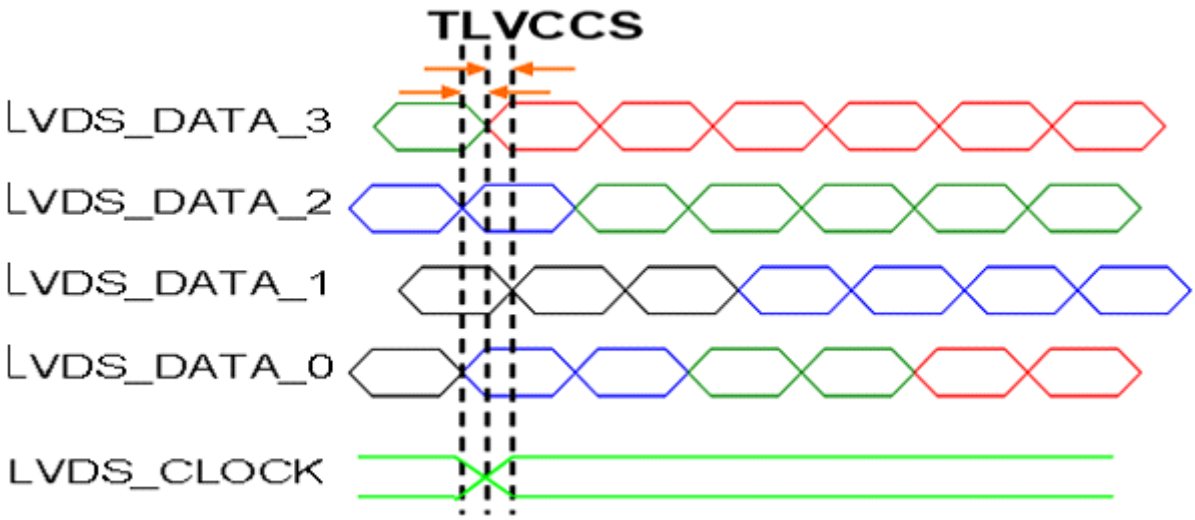

Note (3) The SSCG (Spread spectrum clock generator) is defined as below figures.

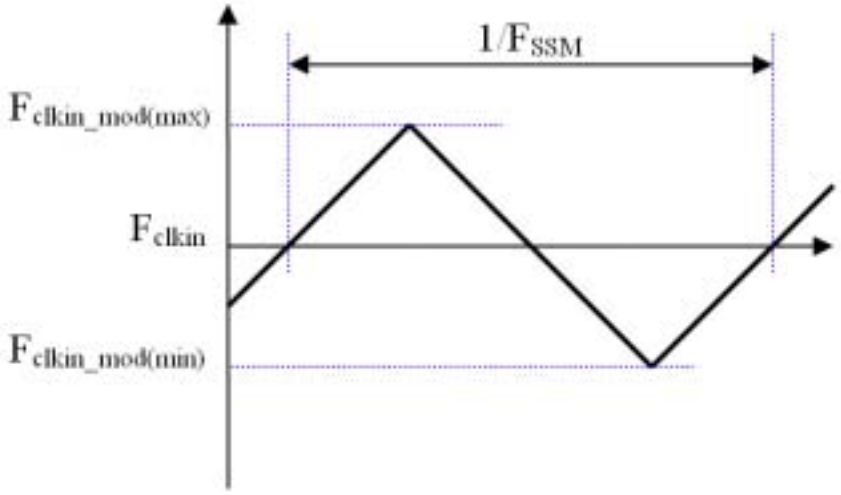

The copyright belongs to CHIMEI InnoLux. Any unauthorized use is prohibited.

4.6 POWER ON/OFF SEQUENCE

The power sequence specifications are shown as the following table and diagram.

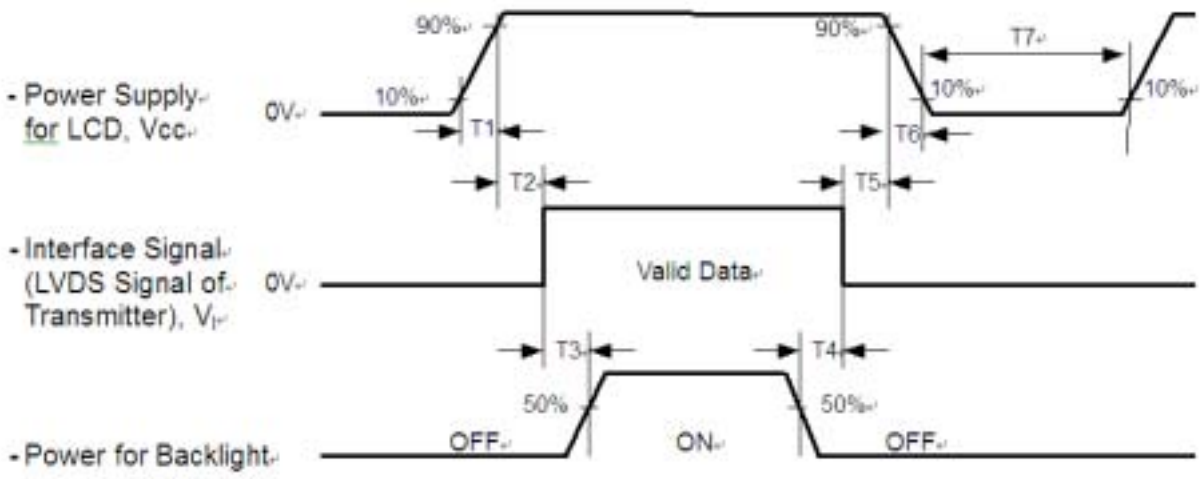

Timing Specifications:

Parameters	Values			Units
	Min	Typ.	Max	
T1	0.5	TBD	10	ms
T2	0	TBD	50	ms
T3	450	TBD	TBD	ms
T4	90	TBD	TBD	ms
T5	0	TBD	50	ms
T6	5	TBD	100	ms
T7	500	TBD	TBD	ms

Note (1) The supply voltage of the external system for the module input should be the same as the definition of Vcc.

Note (2) When the backlight turns on before the LCD operation of the LCD turns off, the display may momentarily become abnormal screen.

Note (3) In case of VCC = off level, please keep the level of input signals on the low or keep a high impedance.

Note (4) T4 should be measured after the module has been fully discharged between power off and on period.

Note (5) Interface signal shall not be kept at high impedance when the power is on.

Note (6) CMO won't take any responsibility for the products which are damaged by the customers not following the Power Sequence.

Note (7) There might be slight electronic noise when LCD is turned off (even backlight unit is also off). To avoid this symptom, we suggest "Vcc falling timing" to follow "t6 spec".

The copyright belongs to CHIMEI InnoLux. Any unauthorized use is prohibited.

5. OPTICAL CHARACTERISTICS

5.1 TEST CONDITIONS

Item	Symbol	Value	Unit
Ambient Temperature	Ta	25±2	°C
Ambient Humidity	Ha	50±10	%RH
Supply Voltage	V_{CC}	5	V
Input Signal	According to typical value in "3. ELECTRICAL CHARACTERISTICS"		
LED Light Bar Input Current Per Input Pin	I_{PIN}	40 ± 1.2	mA_{DC}
PWM Duty Ratio	D	100	%
LED Light Bar Test Converter	CMO 27-D041745		

5.2 OPTICAL SPECIFICATIONS

The relative measurement methods of optical characteristics are shown in 5.2. The following items should be measured under the test conditions described in 5.1 and stable environment shown in Note (5).

Item		Symbol	Condition	Min.	Typ.	Max.	Unit	Note
Color Chromaticity (CIE 1931)	Red	Rx	θ_x=0°, θ_Y =0°	Typ – 0.03	0.641	Typ + 0.03	-	(1), (5)
		Ry			0.338			
	Green	Gx			0.315			
		Gy			0.629			
	Blue	Bx			0.159			
		By			0.059			
	White	Wx			0.313			
		Wy			0.329			
Center Luminance of White (Center of Screen)		L_C		250	300	-	cd/m^2	(4), (5)
Contrast Ratio		CR		700	1000	-	-	(2), (5)
Response Time		T_R	θ_x=0°, θ_Y =0°	-	1.5	2.5	ms	(3)
		T_F		-	3.5	5.5		
White Variation		δW	θ_x=0°, θ_Y =0° USB2000	-	-	1.33	-	(5), (6)
Viewing Angle	Horizontal	θx- + θx+	CR ≧ 10 USB2000	150	170	-	Deg.	(1), (5)
	Vertical	θy- + θy+		140	160	-		
Viewing Angle	Horizontal	θx- + θx+	CR ≧ 5 USB2000	160	178	---	Deg.	(1), (5)
	Vertical	θy- + θy+		150	170	---		

The copyright belongs to CHIMEI InnoLux. Any unauthorized use is prohibited.

Note (1) Definition of Viewing Angle (θx, θy):

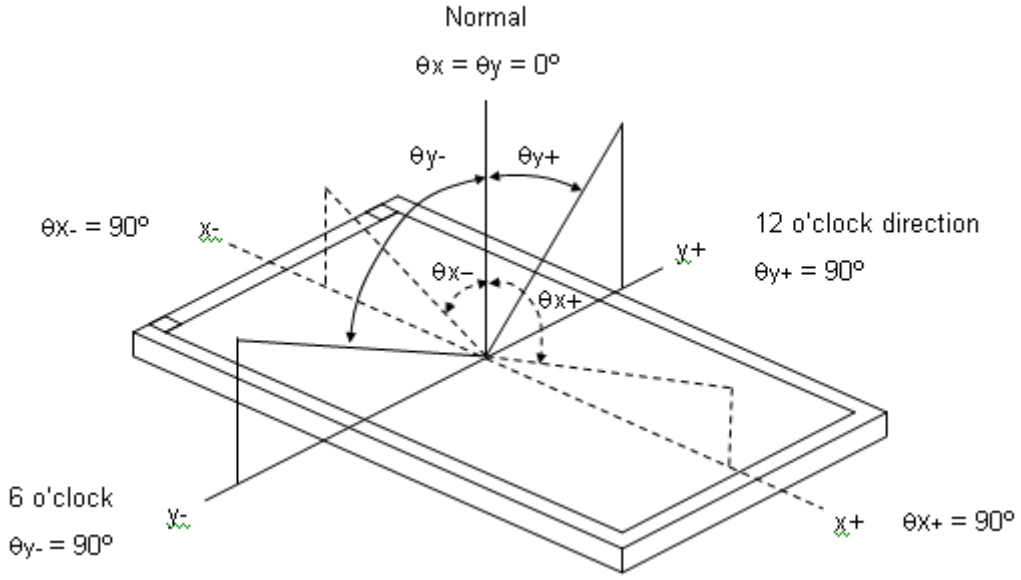

Note (2) Definition of Contrast Ratio (CR):

The contrast ratio can be calculated by the following expression.

Contrast Ratio (CR) = L255 / L0

L255: Luminance of gray level 255

L 0: Luminance of gray level 0

CR = CR (5)

CR (X) is corresponding to the Contrast Ratio of the point X at Figure in Note (6).

Note (3) Definition of Response Time (T_R, T_F):

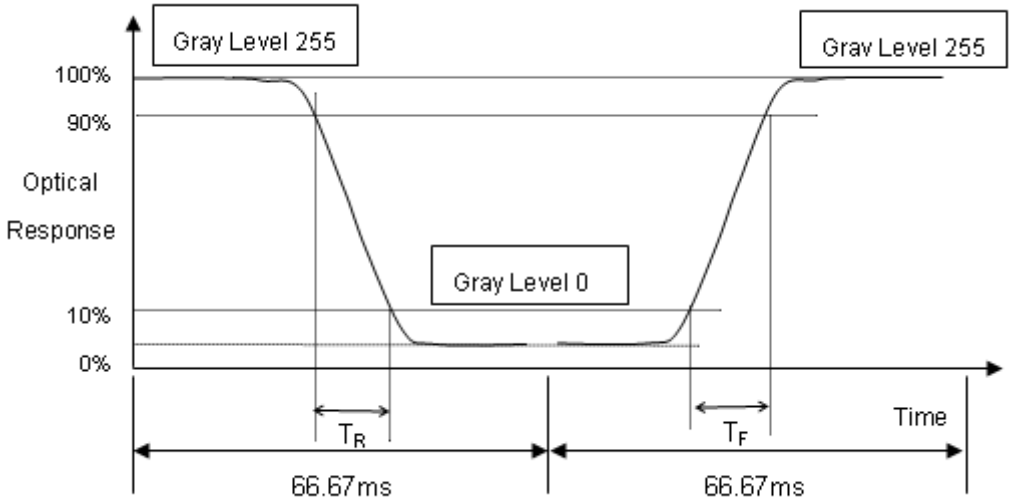

The copyright belongs to CHIMEI InnoLux. Any unauthorized use is prohibited.

Note (4) Definition of Luminance of White (L_C):

Measure the luminance of gray level 255 at center point

L_C = L (5)

L (x) is corresponding to the luminance of the point X at Figure in Note (6).

Note (5) Measurement Setup:

The LCD module should be stabilized at given temperature for 40 minutes to avoid abrupt temperature change during measuring. In order to stabilize the luminance, the measurement should be executed after lighting Backlight for 40 minutes in a windless room.

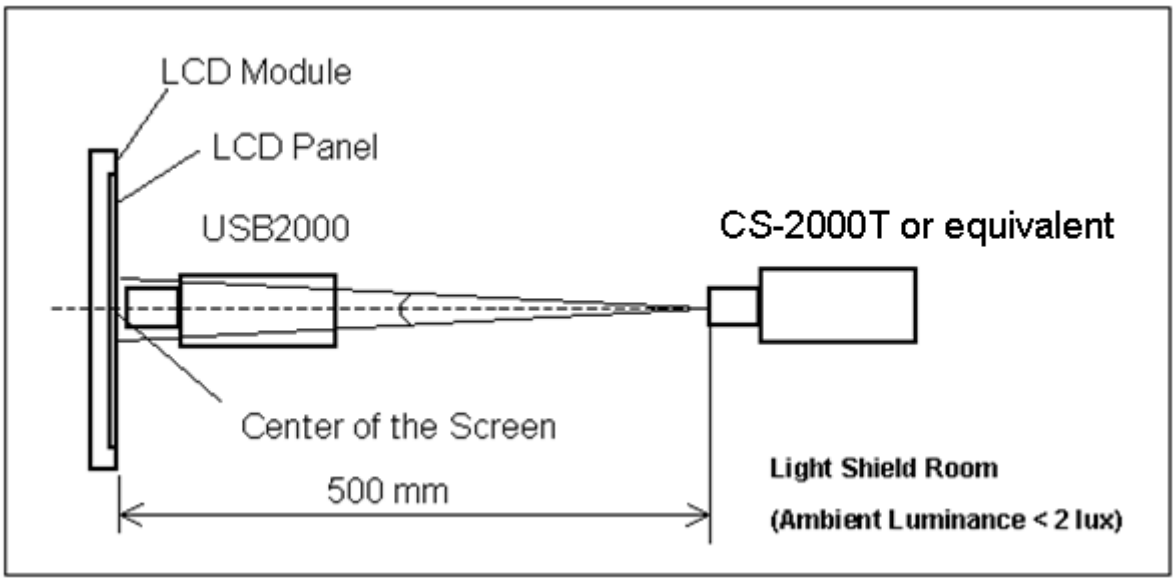

Note (6) Definition of White Variation (δW):

Measure the luminance of gray level 255 at 9 points

δW = Maximum [L (1) ~ L (9)] / Minimum [L (1) ~ L (9)]

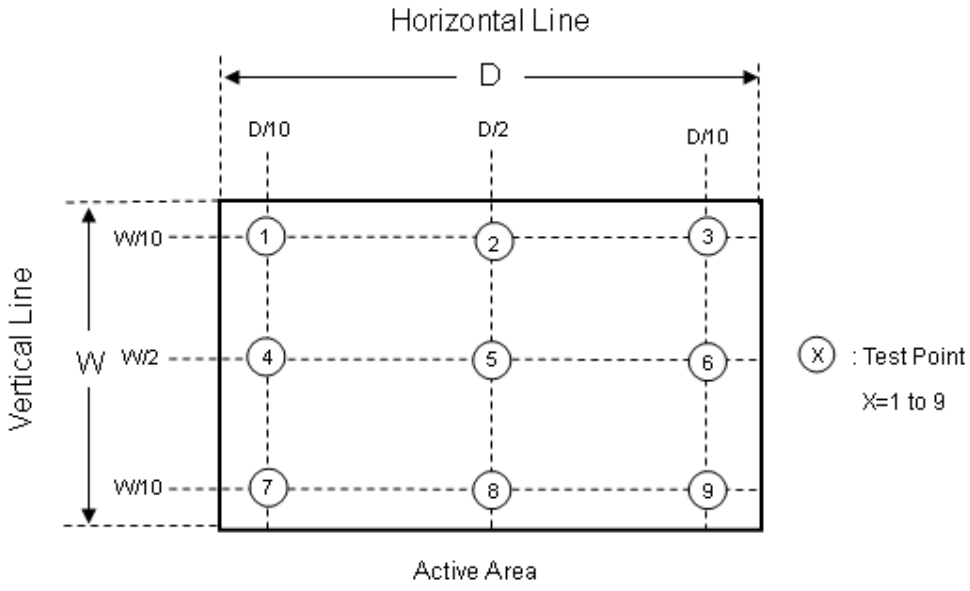

The copyright belongs to CHIMEI InnoLux. Any unauthorized use is prohibited.

6. RELIABILITY TEST ITEM

Items	Required Condition	Note
Temperature Humidity Bias (THB)	Ta= 50℃ , 80%RH, 240hours	
High Temperature Operation (HTO)	Ta= 50℃ , 50%RH , 240hours	
Low Temperature Operation (LTO)	Ta= 0℃ , 240hours	
High Temperature Storage (HTS)	Ta= 60℃ , 240hours	
Low Temperature Storage (LTS)	Ta= -20℃ , 240hours	
Vibration Test (Non-operation)	Acceleration: 1.5 Grms Wave: Half-sine Frequency: 10 - 300 Hz Sweep: 30 Minutes each Axis (X, Y, Z)	
Shock Test (Non-operation)	Acceleration: 50 G Wave: Half-sine Active Time: 11 ms Direction : ± X, ± Y, ± Z.(one time for each Axis)	
Thermal Shock Test (TST)	-20℃/30min , 60℃ / 30min , 100 cycles	
On/Off Test	25℃ ,On/10sec , Off /10sec , 30,000 cycles	
ESD (Electro Static Discharge)	Contact Discharge: ± 8KV, 150pF(330Ω)	
	Air Discharge: ± 15KV, 150pF(330Ω)	
Altitude Test	Operation:10,000 ft / 24hours Non-Operation:30,000 ft / 24hours	

Note (1) criteria : Normal display image with no obvious non-uniformity and no line defect.

Note (2) Evaluation should be tested after storage at room temperature for more than two hour

Note (3) At testing Vibration and Shock, the fixture in holding the module has to be hard and rigid enough so that the module would not be twisted or bent by the fixture.

The fixing condition is shown as below:

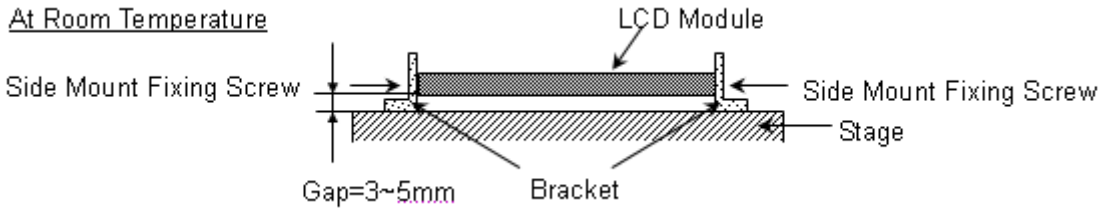

The copyright belongs to CHIMEI InnoLux. Any unauthorized use is prohibited.

7. PACKING

7.1 PACKING SPECIFICATIONS

(1) 11 LCD modules / 1 Box

(2) Box dimensions: 620(L) X 348(W) X 430(H) mm

(3) Weight: approximately: 30.1kg (11 modules per box)

7.2 PACKING METHOD

(1) Carton Packing should have no failure in the following reliability test items.

Test Item	Test Conditions	Note
Vibration	ISTA STANDARD Random, Frequency Range: 1 – 200 Hz Top & Bottom: 30 minutes (+Z), 10 min (-Z), Right & Left: 10 minutes (X) Back & Forth 10 minutes (Y)	Non Operation
Dropping Test	1 Corner , 3 Edge, 6 Face, 31cm	Non Operation

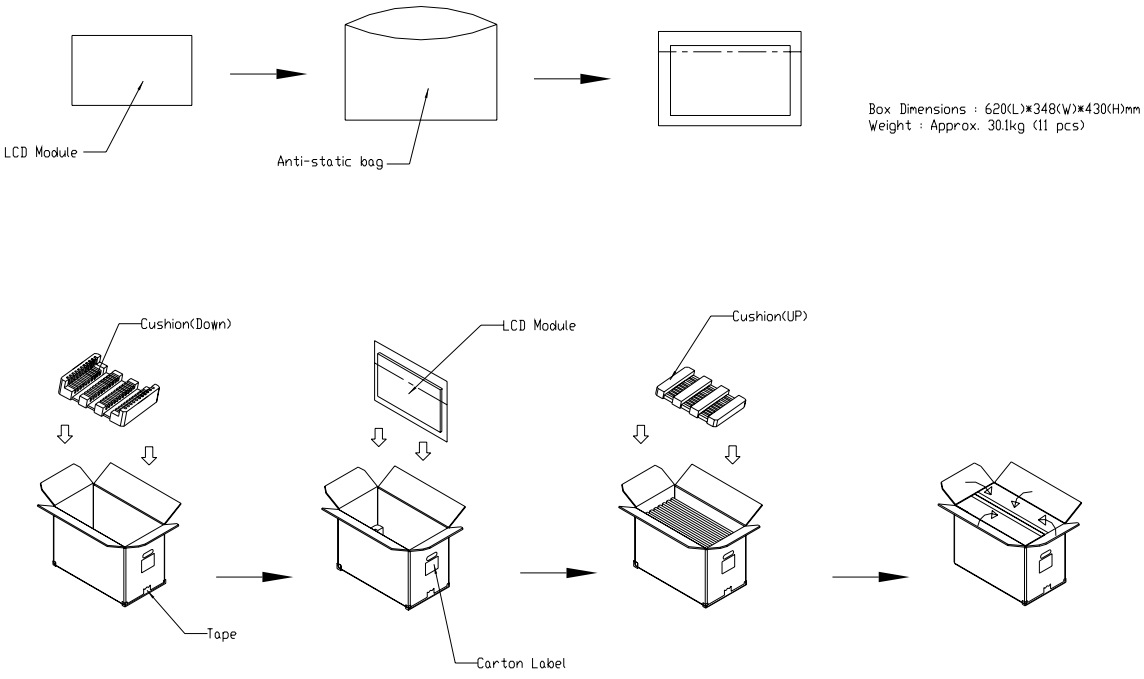

Figure. 7-1 Packing method

The copyright b ohibited.

7.3 PALLET

For ocean shipping

Sea / Land Transportation (40ft HQ Container)

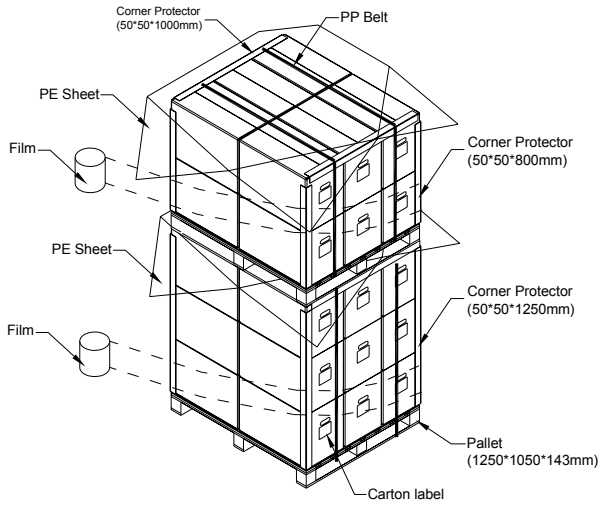

Sea / Land Transportation (40ft Container)

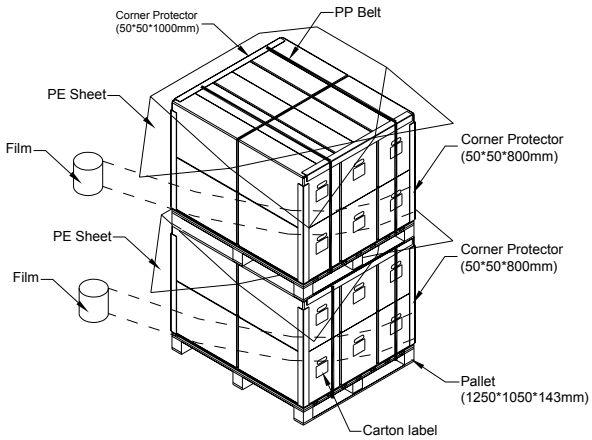

For air transport

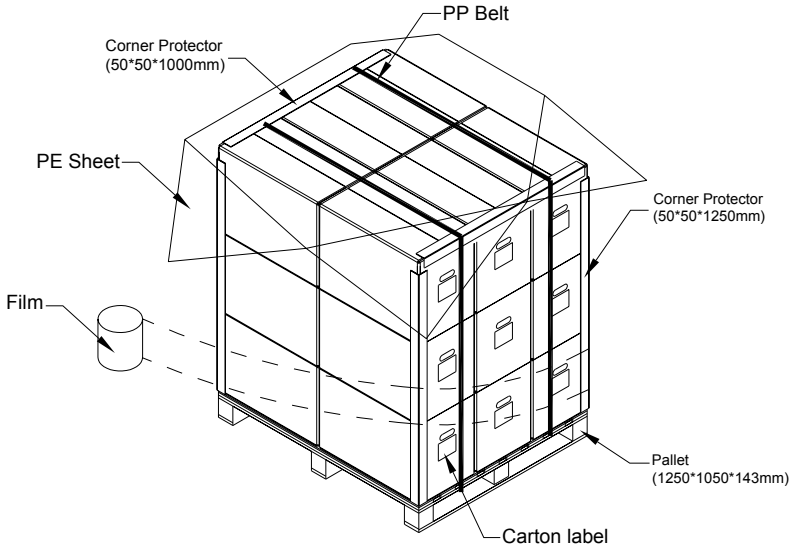

Figure. 7-2 Packing method

The copyright belongs to CHIMEI InnoLux. Any unauthorized use is prohibited.

8. CMI MODULE LABEL

The barcode nameplate is pasted on each module as illustration, and its definitions are as following explanation.



(a) Model Name: M236H3-LA3

(b) Revision: Rev. XX, for example: A0, A1… B1, B2… or C1, C2…etc.

(c) CMI barcode definition:

Serial ID: XX-XX-X-XX-YMD-L-NNNN

Code	Meaning	Description
XX	CMI internal use	-
XX	Revision	Cover all the change
X	CMI internal use	-
XX	CMI internal use	-
YMD	Year, month, day	Year: 0~9, 2001=1, 2002=2, 2003=3…2010=0, 2011=1, 2012=2… Month: 1~12=1, 2, 3, ~, 9, A, B, C Day: 1~31=1, 2, 3, ~, 9, A, B, C, ~, W, X, Y, exclude I, O, and U.
L	Product line #	Line 1=1, Line 2=2, Line 3=3, …
NNNN	Serial number	Manufacturing sequence of product

(d) Customer's barcode definition:

Serial ID: CM-N63A3-X-X-X-XX-L-XX-L-YMD-NNNN

Code	Meaning	Description
CM	Supplier code	CMO=CM
N63A2	Model number	M236H3-LA3= N63A3
X	Revision code	Non ZBD: 1,2,~,8,9 / ZBD: A~Z
X	Source driver IC code	Century=1, CLL=2, Demos=3, Epson=4, Fujitsu=5, Himax=6, Hitachi=7, Hynix=8, LDI=9, Matsushita=A, NEC=B, Novatec=C, OKI=D, Philips=E, Renasas=F, Samsung=G, Sanyo=H, Sharp=I, TI=J, Toppo=K, Toshiba=L , Windbond=M
X	Gate driver IC code	
XX	Cell location	Tainan Taiwan=TN, Ningbo China=CN
L	Cell line #	1,2,~,9,A,B,~,Y,Z
XX	Module location	Tainan, Taiwan=TN ; Ningbo China=NP
L	Module line #	1,2,~,9,A,B,~,Y,Z
YMD	Year, month, day	Year: 0~9, 2001=1, 2002=2, 2003=3…2010=0, 2011=1, 2012=2… Month: 1~12=1, 2, 3, ~, 9, A, B, C Day: 1~31=1, 2, 3, ~, 9, A, B, C, ~, T, U, V
NNNN	Serial number	By LCD supplier

The copyright belongs to CHIMEI InnoLux. Any unauthorized use is prohibited.

(e) FAB ID(UL Factory ID):

Region	Factory ID
TWCMO	GEMN
NBCMO	LEOO
NBCME	CANO
NHCMO	CAPG

9. PRECAUTIONS

9.1 ASSEMBLY AND HANDLING PRECAUTIONS

(1) Do not apply rough force such as bending or twisting to the module during assembly.

(2) To assemble or install module into user's system can be only in clean working areas. The dust and oil may cause electrical short or worsen the polarizer.

(3) It's not permitted to have pressure or impulse on the module because the LCD panel and Backlight will be damaged.

(4) Always follow the correct power sequence when LCD module is connecting and operating. This can prevent damage to the CMOS LSI chips during latch-up.

(5) Do not pull the I/F connector in or out while the module is operating.

(6) Do not disassemble the module.

(7) Use a soft dry cloth without chemicals for cleaning, because the surface of polarizer is very soft and easily scratched.

(8) It is dangerous that moisture come into or contacted the LCD module, because moisture may damage LCD module when it is operating.

(9) High temperature or humidity may reduce the performance of module. Please store LCD module within the specified storage conditions.

(10)When ambient temperature is lower than 10ºC may reduce the display quality. For example, the response time will become slowly.

9.2 STORAGE PRECAUTIONS

(1) Do not leave the module in high temperature, and high humidity for a long time. It is highly recommended to store the module with temperature from 0℃ to 35℃ and relative humidity of less than 70%

(2) Do not store the TFT – LCD module in direct sunlight

(3) The module should be stored in dark place. It is prohibited to apply sunlight or fluorescent light in storing

9.3 OPERATION PRECAUTIONS

(1) The LCD product should be operated under normal condition.

Normal condition is defined as below :

Temperature : 20±15℃

Humidity: 65±20%

Display pattern : continually changing pattern(Not stationary)

The copyright belongs to CHIMEI InnoLux. Any unauthorized use is prohibited.

(2) If the product will be used in extreme conditions such as high temperature,high humidity,high altitude ,display pattern or operation time etc…It is strongly recommended to contact CMO for application engineering advice . Otherwise , Its reliability and function may not be guaranteed.

9.4 SAFETY PRECAUTIONS

(1) If the liquid crystal material leaks from the panel, it should be kept away from the eyes or mouth. In case of contact with hands, skin or clothes, it has to be washed away thoroughly with soap.

(2) After the module's end of life, it is not harmful in case of normal operation and storage.

9.5 SAFETY STANDARDS

The LCD module should be certified with safety regulations as follows:

(1) UL60950-1 or updated standard.

(2) IEC60950-1 or updated standard.

9.6 OTHER

When fixed patterns are displayed for a long time, remnant image is likely to occur.

Appendix. OUTLINE DRAWING

The copyright belongs to CHIMEI InnoLux. Any unauthorized use is prohibited.

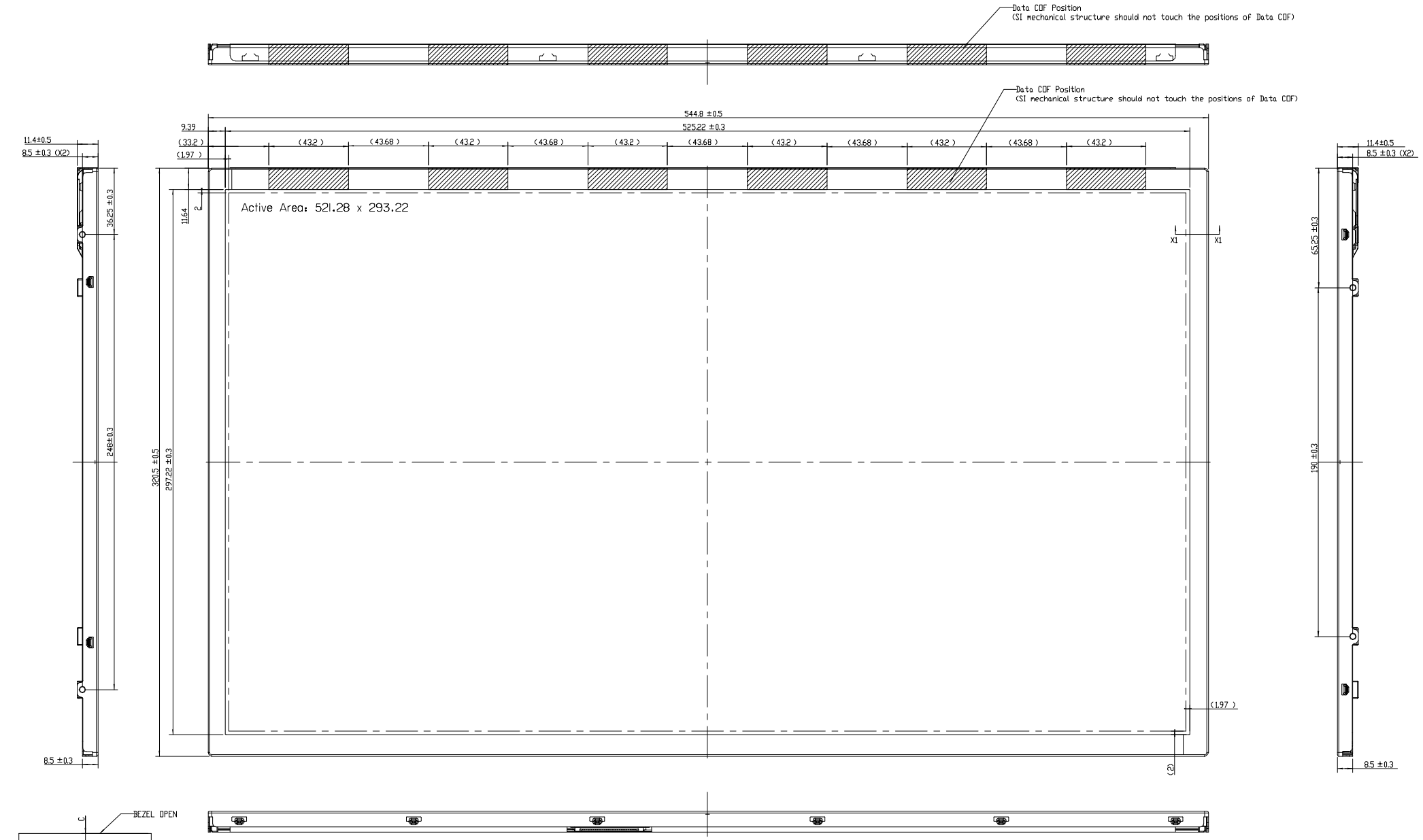

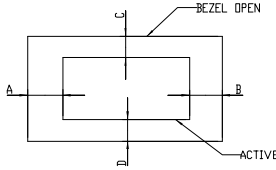

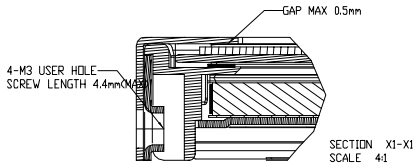

SECTION X1-X1
SCALE 4:1

NOTE:
1. DISPLAY AREA POSITION TOLERANCE: IA-BK=1mm & IC-DK=1mm.
2. UNSPECIFIED TOLERANCE: ±0.5mm.
3. SIDE MOUNT HOLE ROTATIONAL TORQUE MAX. IS 5kgf-cm.

Mark	Description	Date	Changed_By	Approved_By	ECN No.	Remark

TITLE	ASSY_MODULE_M236H3-LA3					2D REV.	
						3D REV.	1.16+
Approved	KL_LIN	Drawing No.	TBD				
Checked	ALAN_LEE	Part No.	TBD				
Drawer	JAYRE_TANG	Material	TBD			Sheet	1 / 2 A1
Designer	JAYRE_TANG	Date	2010/6/7	Scale	1:1	Unit:mm	

CHI MEI OPTOELECTRONICS CORP.

ALL RIGHTS RESERVED, COPYING FORBIDDEN.

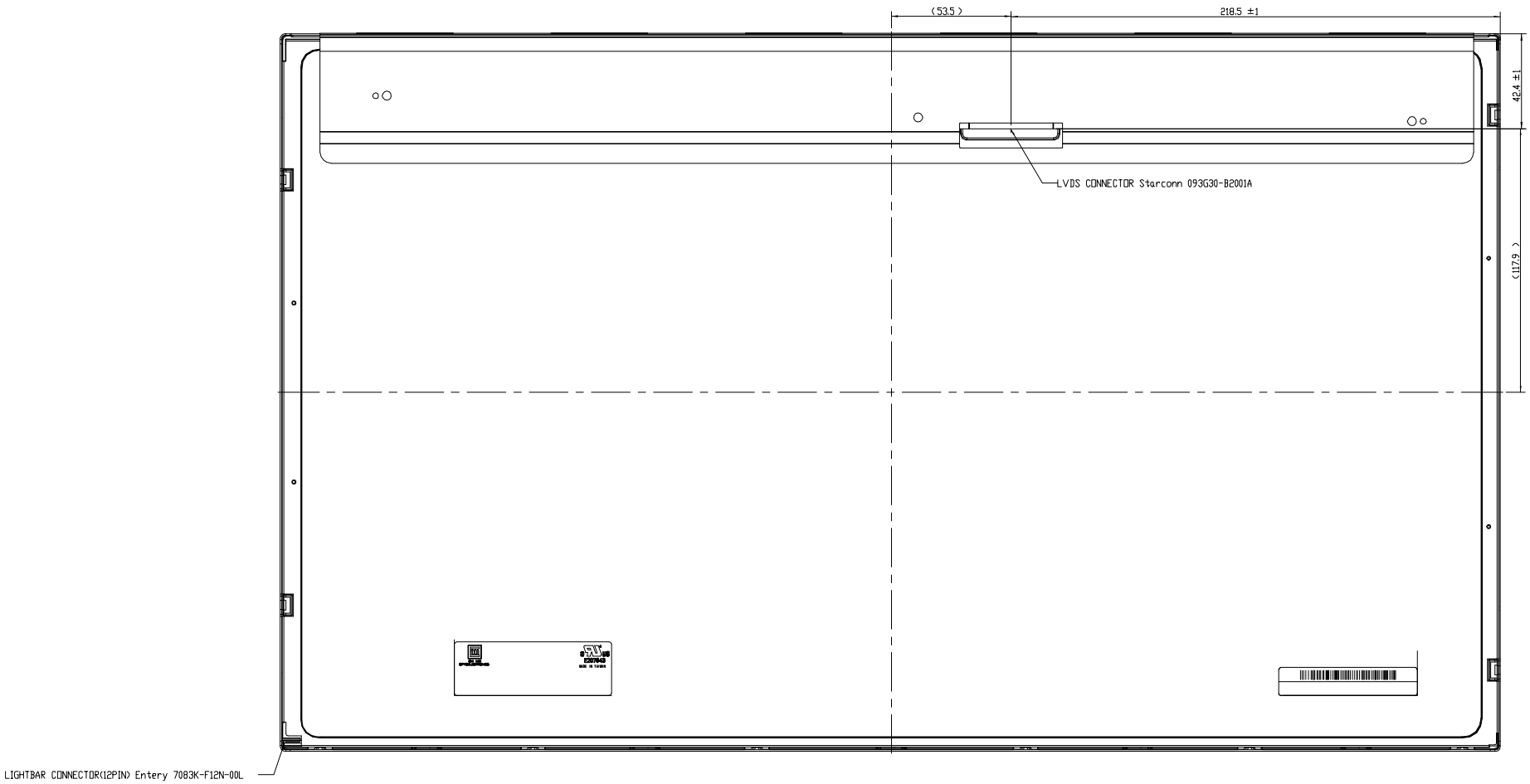

NOTE:
1. DISPLAY AREA POSITION TOLERANCE: IA-BK=1mm & IC-DK=1mm.
2. UNSPECIFIED TOLERANCE: ∮0.5mm.
3. SIDE MOUNT HOLE ROTATIONAL TORQUE MAX. IS 5kgf-cm.

Mark	Description	Date	Changed_By	Approved_By	ECN No.	Remark

TITLE	ASSY_MODULE_M236H3-LA3					2D REV.	
						3D REV.	L16+
Approved	KL_LIN	Drawing No.	TBD				
Checked	ALAN_LEE	Part No.	TBD				
Drawer	JAYRE_TANG	Material	TBD			Sheet	2 / 2 A1
Designer	JAYRE_TANG	Date	2010/6/7	Scale	1:1	Unitmm	

CHI MEI OPTOELECTRONICS CORP.

ALL RIGHTS RESERVED. COPYING FORBIDDEN.